NOT FOR PUBLICATION
Presented Before the Division of Gas and Fuel Chemistry
American Chemical Society

Atlantic City, New Jersey, Meeting, September 13-18, 1959

PRODUCTION OF NATURAL GAS SUBSTITUTES BY CONTINUOUS PRESSURE HYDROGENOLYSIS OF PETROLEUM OILS

E. B. Shultz, Jr., N. Mechales and H. R. Linden
Institute of Gas Technology
Chicago, Illinois

High-pressure hydrogasification is a vapor-phase, thermal hydrogenolysis process for nearly complete conversion of distillate, crude and residual petroleum oils to fuel gases of high methane content. The required hydrogen supply may be generated by catalytic steam reforming of a portion of the product gas,[5,10] or by partial oxidation of fresh or byproduct oil streams.[4]

Studies by Dent and others[1,3,6] of the effects of operating variables and feedstock properties on the yield and composition of products of high-pressure hydrogasification have been directed primarily to the development of a process for producing gases of 500-600 B.t.u./SCF (SCF refers to standard cubic feet measured at 60°F., 30 inches of mercury absolute pressure, and saturated with water vapor). Work done at the Institute of Gas Technology[11,13] has been in the range of operating conditions suitable for production of high-heating-value natural gas substitutes.

Gases of about 900 B.t.u./SCF are best produced at hydrogen to oil feed ratios corresponding approximately to the stoichiometric requirements for methane formation. Lower feed ratios result in excessive liquid products formation and carbon deposition, and higher feed ratios result in excessive hydrogen dilution. High-heating-value gas production is also favored by high pressures and long residence times. Typical operating conditions for a flow reactor are 1400°F. maximum temperature, 1500 p.s.i.g., and residence times ranging from about 100 seconds for paraffinic oils to several hundred seconds for the less reactive, higher C/H weight ratio oils; under these conditions, only about 10 wt. % of the feedstock is converted to liquid products consisting of low-boiling aromatic hydrocarbons. In low-heating-value gas production, substantially lower pressures and residence times, and higher temperatures and hydrogen feed ratios, can be employed.[3]

The major problem in operation of high-pressure hydrogasification processes is control of carbon deposition. The two continuous processes currently being developed for fluid feedstocks use different methods of overcoming the normal carbon-forming tendencies of crude and residual oils during hydrogenolysis. The British Gas Council[1,3,6] has used a fluidized coke bed reactor to handle carbon laydown of somewhat less than one-half of the Conradson carbon residue of the feedstock. In the work described here, crude or residual oils were first subjected to a pretreatment step essentially equivalent to many of the hydrocracking processes now under development.[2,8,15] Pretreatment over commercial cobalt molybdate hydrogenation catalyst at 850°F. and 1500 p.s.i.g., converted these feeds to products with either negligible or greatly reduced Conradson carbon residue, and with substantially lower C/H weight ratio. When complete conversion into a distillate product was not possible, the higher-boiling fractions containing the carbon-forming constituents were separated before charging to the hydrogasification reactor.

APPARATUS AND PROCEDURE

The apparatus comprised hydrogen and oil feed systems, prehydrogenation and hydrogasification reactors, product liquid recovery sections and a product gas metering system. A flow sheet has been presented in a preliminary study.[13]

Hydrogen was fed from storage cylinders, replenished at intervals by compression of commercial-grade cylinder hydrogen. Oil was fed from a weigh vessel through a reciprocating proportioning pump. In all runs, oil and hydrogen were mixed and introduced at room temperature.

The downflow prehydrogenator for crude and residual oil pretreatment was constructed of Type 316 stainless steel. It was 5-3/4 inches in outside diameter, 3 inches in inside diameter, and 40 inches in inside length, and was equipped at both ends with Autoclave Engineers self-sealing closures. A thermowell, 3/8 inch in outside diameter, extended concentrically into the reactor. In some runs, the prehydrogenator inside diameter was reduced to 2 inches by insertion of a stainless steel sleeve, 35 inches in length.

When the full volume of the prehydrogenator was employed, the reactants were passed through a 19-inch preheat zone of 3/8-inch diameter periclase spheres before entering the 16-inch catalyst bed, composed of equal volumes of 1/8-inch tablets of a commercial cobalt molybdate on alumina catalyst and 1/8-inch fused alumina pellets, randomly mixed. When the sleeve was used, a 20-inch catalyst bed composed of undiluted 1/8-inch cobalt molybdate tablets was located in the center of the reactor above a 9-inch zone filled with 3/8-inch diameter periclase spheres. The reported feed oil space velocity for diluted catalyst was based on the sum of the volumes of catalyst and fused alumina charged (0.0353 cu.ft. each); for undiluted catalyst, it was based on a catalyst charge volume of 0.0353 cu.ft.

The downflow hydrogasifier was constructed of 19-9DL alloy. It was 6 inches in outside diameter, 3 inches in inside diameter, and 35 inches in inside length. A 3/8-inch diameter thermowell extended into the reaction zone. The vessel was equipped at the top with an Autoclave Engineers self-sealing closure; the bottom consisted of an integral water-cooled tailpiece, which was sealed with a simple gasketed closure. In some of the tests, a sleeve similar to the one used in the prehydrogenator was inserted to reduce the inside diameter to 2 inches. For both the prehydrogenator and hydrogasifier, high-pressure condenser-separators were provided, from which gases were continuously recovered and liquids intermittently removed.

A 100 cu.ft./hr. wet-test meter was used to measure product gas flow rates. A proportional sample of product gas was collected in a water-sealed holder for analysis.

Reactor temperatures were sensed by Chromel-Alumel thermocouples, and pressures by Bourdon tube gages. Temperatures were measured and recorded by means of a potentiometer strip-chart; reactor and orifice pressures were also recorded.

In initial tests, the prehydrogenator and hydrogasifier were operated simultaneously, with the entire effluent from the prehydrogenation step passing to the hydrogasifier. However, the periods of adequate catalyst performance at the high temperatures required for complete removal of carbon-forming materials from residual and low-grade crude oils were limited by catalyst carbon deposition. Consequently, it appeared more practical to operate the prehydrogenator at less severe conditions, and to separate any high-boiling, asphaltene-containing materials from the hydrogasifier feed. This was simulated by prehydrogenation, distillation of the liquid products, and hydrogasification of the 0°-360°C. fraction. The hydrogen to oil feed ratio to the hydrogasifier was adjusted to account for the hydrogen consumed in prehydrogenation.

Product gases, and 0°-160°C. fractions of product liquids, were analyzed with a Consolidated Engineering Co. Model 21-103 mass spectrometer. Other analyses were conducted in accordance with standard ASTM methods, with the following exceptions: prehydrogenator product liquid 500-gram distillations were carried out at atmospheric pressure using a procedure similar to ASTM Method D1160-56T;[14] carbon and hydrogen ultimate analyses were made by combustion train, with the Grace and Gauger modification[7] of ASTM Method D271-44.

Specific gravities and ideal gas heating values were calculated from gas analyses. Feed and product gas volumes and heating values were calculated at conditions of 60°F., 30 inches of 32°F. mercury absolute pressure, saturated with water vapor. Specific gravities were computed from the average molecular weight of the dry gas, and were based on air of molecular weight 28.97.

PROCESS CHARACTERISTICS

Selected prehydrogenation and hydrogasification results for typical feedstocks are shown in Tables 1-3 to illustrate the characteristics of the process under the preferred operating conditions. The premium feedstocks, kerosine and diesel oil, required no pretreatment before hydrogasification. The properties of Aruba reduced crude were sufficiently improved by prehydrogenation to permit use of the total product oil as hydrogasification charge stock. The relatively low-grade Taparito crude oil still had a substantial Conradson carbon residue after prehydrogenation, so that only the 0°-360°C. distillate fraction was used as hydrogasification charge stock. Recycle of the residue fraction to effect further conversion to distillate was found to be practical. Prehydrogenation results for Boscan crude oil are also shown to illustrate that, after fractionation, an acceptable hydrogasification charging stock could be obtained from a crude oil feedstock typical of the lowest grade suitable for the process. The prehydrogenation conditions used in obtaining the data of Table 2 were determined to give practical on-stream periods of the commercial catalyst used.

Table 3 shows the hydrogasification results of the distillate and prehydrogenated oils at about 1400°F. maximum reaction temperature and hydrogen to oil feed ratios corresponding to the stoichiometric requirements for methane formation. The distillate oils, and the 0°-360°C. fraction of the prehydrogenated Taparito crude oil, did not give carbon deposition in the hydrogasifier; the prehydrogenated Aruba reduced crude charge, which had a Conradson carbon residue of 0.41 wt. %, did give a small carbon deposit. This suggests that even small amounts of objectionable high-boiling fractions in the prehydrogenated oil should be removed to ensure carbon-free hydrogasifier operation.

Because of the high reactivity associated with its low C/H weight ratio, kerosine gave results comparable to those of the other feedstocks at considerably less severe conditions; kerosine produced approximately 900 B.t.u./SCF gas of high methane-plus-ethane content at 500 p.s.i.g. and approximately 50 seconds residence time, whereas the other feedstocks required a pressure of 1500 p.s.i.g. at a residence time of approximately 300 seconds. The relatively high ethane content of the product gas from kerosine is typical of operation at comparatively short residence times with paraffinic (low C/H weight ratio) charging

Table 1.-PROPERTIES OF DISTILLATE OIL FEEDSTOCKS

Feed oil designation	Kerosine	Diesel Oil
Specific gravity		
60°F./60°F.	0.805	0.838
°API	44.2	37.3
Viscosity, centistokes at 100°F.	n.d.	2.862
Ultimate analysis, wt. %		
Carbon	85.88	86.27
Hydrogen	14.05	13.50
Sulfur	0.04	0.30
Ash	n.d.	0.000
Carbon/hydrogen wt. ratio	6.11	6.39
Distillation (ASTM D158-41), °F.		
Initial boiling point	349	382
10%	384	452
20%	396	470
30%	406	486
40%	413	497
50%	421	507
60%	429	520
70%	439	536
80%	450	554
90%	470	580
End point	518	639
Distillation residue and loss, %	2	2
Heat of combustion, B.t.u./lb.[a]	19960	19730

[a] Estimated from Reference 9.

Table 2.-PREHYDROGENATION OF CRUDE AND RESIDUAL OILS

Feed oil designation	Aruba Reduced Crude		Taparito Crude			Boscan Crude	
Run No.	71		80			100	
Prehydrogenation conditions							
Maximum temp., °F.	850		850			845	
Average catalyst bed temp., °F.	835		825			810	
Pressure, p.s.i.g.	1500		1500			1500	
Feed ratio, SCF H_2/lb.	31.59		32.96			31.98	
Feed oil space velocity, cu.ft. oil/cu.ft. catalyst bed-hr.	0.87[a]		0.42[b]			0.42[b]	
Prehydrogenator off-gas							
Wt. % of carbon in feed	5.8		4.6			5.0	
Composition, mole %							
$N_2 + CO + CO_2$	0.5		0.4			0.3	
H_2	97.2		97.7			97.7	
CH_4	1.1		0.7			0.9	
Higher paraffins	1.0		1.0			1.0	
Olefins	0.2		0.2			0.1	
Total	100.0		100.0			100.0	
Catalyst carbon, wt. % of carbon in feed	n.d.		0.86			0.94	
Oil properties	Feed	Total Product[c]	Feed	Total Product	0°-360°C. Fraction[d]	Feed	Total Product
Specific gravity							
60°F./60°F.	0.925	0.851	0.948	0.888	0.842	1.003	0.894
°API	21.5	34.8	17.8	27.8	36.5	9.6	26.7
Viscosity, S.S.U. at 122°F.	203	34.8	66.0[e]	106.0	32.6	3084[e]	95.5
Ultimate analysis, wt. %							
Carbon	84.88	86.17	84.90	85.55	86.22	81.64	86.39
Hydrogen	11.73	12.55	11.38	12.02	13.00	10.52	12.57
Sulfur	1.62	0.20	1.56	1.01	0.19	5.40	1.58
Ash	0.05	n.d.	0.07	0.03	trace	0.24	0.08
Carbon/hydrogen wt. ratio	7.24	6.87	7.46	7.12	6.63	7.76	6.98
Conradson carbon residue, wt. %	7.4	0.41[f]	9.1	4.3[f]	0.0	14.9	5.0
Distillation, wt. %							
0°-160°C.	1.1	8.4	2.7	6.7	16.5	1.7	7.9
160°-200°C.	1.1	8.4	2.4	6.5	12.8	2.1	6.7
200°-300°C.	25.5	40.4	12.9	25.0	43.0	16.1	22.0
300°C.-end point	12.3	20.6	7.2	15.0	21.4	--	11.8
Residue and loss	60.0	22.2	74.8	46.8	6.3	80.1	51.6
End point, °C.	355	332[g]	320	341[g]	363	300	333[g]
Heat of combustion, B.t.u./lb.[h]	19120	19370	18980	19200	19540	18810	19290

[a] Catalyst bed consisted of 0.0353 cu.ft. undiluted cobalt molybdate catalyst.

[b] Catalyst bed consisted of 0.0353 cu.ft. cobalt molybdate and 0.0353 cu.ft. fused alumina pellets, randomly mixed.

[c] Feedstock for hydrogasification Run No. 72.

[d] Feedstock for hydrogasification Run No. 89 - composite of 0°-360°C. fractions of product oils from four prehydrogenation tests at 850°F.

[e] S.S.F. at 122°F.

[f] Calculated from value for residue fraction.

[g] Obtained at 400°C. pot temperature.

[h] Estimated from Reference 9.

Table 3.-HYDROGASIFICATION OF DISTILLATE OILS AND PREHYDROGENATED CRUDE AND RESIDUAL OILS

Feed oil designation	Kerosine	Diesel Oil	Total Prehydrogenated Aruba Reduced Crude	0°-360°C. Fraction of Prehydrogenated Taparito Crude
Run No.	62A	33-C	72	89
Oil rate, lb. C/hr.	3.06	1.50	1.51	1.50
Hydrogen feed ratio				
% of stoichiometric[a]	98.0	99.9	99.5	100.3
SCF/lb.	27.67	29.51	31.13	30.54
Pressure, p.s.i.g.	500	1500	1500	1500
Temperature, °F.				
Average[b]	1325	1335	1355	1305[c]
Maximum	1400	1395	1405	1395
Residence time, sec.[d]	51.0	301	304	319
Hydrogen consumption, SCF/lb.	16.2	22.3	23.9	22.6
Product recovery, wt. % of oil + hydrogen fed	103.5	101.7	99.0	97.2
Product distribution, %				
Gas	88.9	93.2	91.1	91.0
Liquid	11.1	6.8	8.7	9.0
Carbon	nil	nil	0.2	nil
Product gas yield,				
SCF/lb.	29.58	30.19	29.20	29.28
SCF/cu.ft. reactor-hr.	726.9	362.8	353.1	354.2
Net thermal recovery, %[e]	90.4	88.9	80.1	80.1
Product gas properties				
Composition, mole %				
$N_2 + CO + CO_2$	0.8	0.4	1.2	0.4
H_2	38.8	23.8	24.7	27.2
CH_4	40.5	69.7	69.7	66.2
C_2H_6	17.1	5.3	3.4	5.4
C_3H_8	0.4	--	--	0.1
1-Butane	0.1	--	--	--
Olefins	1.0	0.1	--	--
Benzene	1.2	0.7	1.0	0.7
Toluene	0.1	--	--	--
Total	100.0	100.0	100.0	100.0
Heating value, B.t.u./SCF	909	893	872	868
Specific gravity (air = 1)	0.495	0.482	0.478	0.466

[a] Stoichiometric for complete conversion of C + H in feed oil to methane.

[b] Based on average of temperatures measured at centers of three equal zones.

[c] Interpolated value.

[d] Based on dry product gas volume at reactor pressure and average temperature.

[e] $$\frac{\text{Heat of combustion of product gas} - \text{heat of combustion of feed hydrogen}}{\text{heat of combustion of feed oil}} \times 100.$$

stocks. The conditions employed for diesel oil, also a highly reactive material, are somewhat more severe than required for production of a natural gas substitute; satisfactory results have been obtained at approximately twice the feed rate (one-half the residence time) than that employed in the test reported in Table 3.

Liquid product formation was on the order of 10 wt. % of the feedstock, and tended to increase with the C/H weight ratio of the feedstock at comparable operating conditions. The conversion efficiency of the process is indicated by net thermal recoveries of approximately 80 to 90% under the typical process conditions of Table 3; this parameter is a measure of the fraction of the heat of combustion in the feedstock which is recovered in the product gas.

EFFECTS OF PROCESS VARIABLES

The most effective control over hydrogasification product distribution can be exerted with the hydrogen to oil feed ratio. Table 4 shows that an increase in hydrogen feed ratio from 50 to 100% of stoichiometric reduced carbon formation from diesel oil from about 12% of the total weight of oil and hydrogen fed, to essentially zero; this was accompanied by a significant decrease in liquid products formation. Conversion to gas increased correspondingly. The gaseous product distribution (Figure 1) also changed considerably as 100% of stoichiometric feed ratio was approached, showing an abrupt increase in hydrogen breakthrough and a more gradual increase in ethane yield.

At 50% of stoichiometric feed ratio, there was little change in gaseous product distribution with increases in reactor pressure since the equimolar methane-ethane-hydrogen system was close to equilibrium at the long residence times employed. At 75 and 100% of stoichiometric feed ratio, the high ethane yields characteristic of aliphatic and alicyclic hydrocarbon hydrogenolysis systems were obtained,[12] and the hydrogen utilized for methane formation increased considerably with increases in pressure and corresponding increases in residence time.

The above results reflect the transition from control by pyrolysis reactions at the lowest feed ratio, to control by hydrogenolysis reactions at the highest feed ratio. The liquid products also reflect this transition. The proportion of benzene in the liquid products increased greatly with feed ratio, while the proportion of higher-boiling aromatics was greatly reduced.

Figure 2 correlates gaseous product yields from diesel oil with residence time, at approximately 100% of stoichiometric feed ratio. It can be seen that at residence times sufficient for completion of the primary gasification reactions as indicated by nearly constant net gasification (weight of product gas less weight of feed hydrogen, both per unit weight of feed oil), the gaseous product distribution was not affected by pressure over the 500-1500 p.s.i.g. range. This is characteristic of operating conditions where gas composition is primarily determined by the secondary, low molecular weight paraffin hydrogenolysis reactions: $C_n H_{2n+2} + H_2 \rightarrow CH_4 + C_{n-1} H_{2n}$, which appear to be pressure insensitive.

Further insight into the nature of the hydrogenolysis reactions can be gained from the data of Table 5 on the effect of temperature on conversion of the 0°-300°C. fraction of prehydrogenated Taparito crude oil. Stoichiometric hydrogen feed ratio and 1500 p.s.i.g. were employed, and the diameter of the hydrogasifier was reduced to 2 inches to permit better temperature control over a 1100°-1400°F. range at four-fold variations in oil feed rate. Feedstock conversion to gas increased greatly with increases in temperature, and increased only slightly with increases in residence time. Low conversions to gas were accompanied by corresponding increases in liquid products and substantially lower

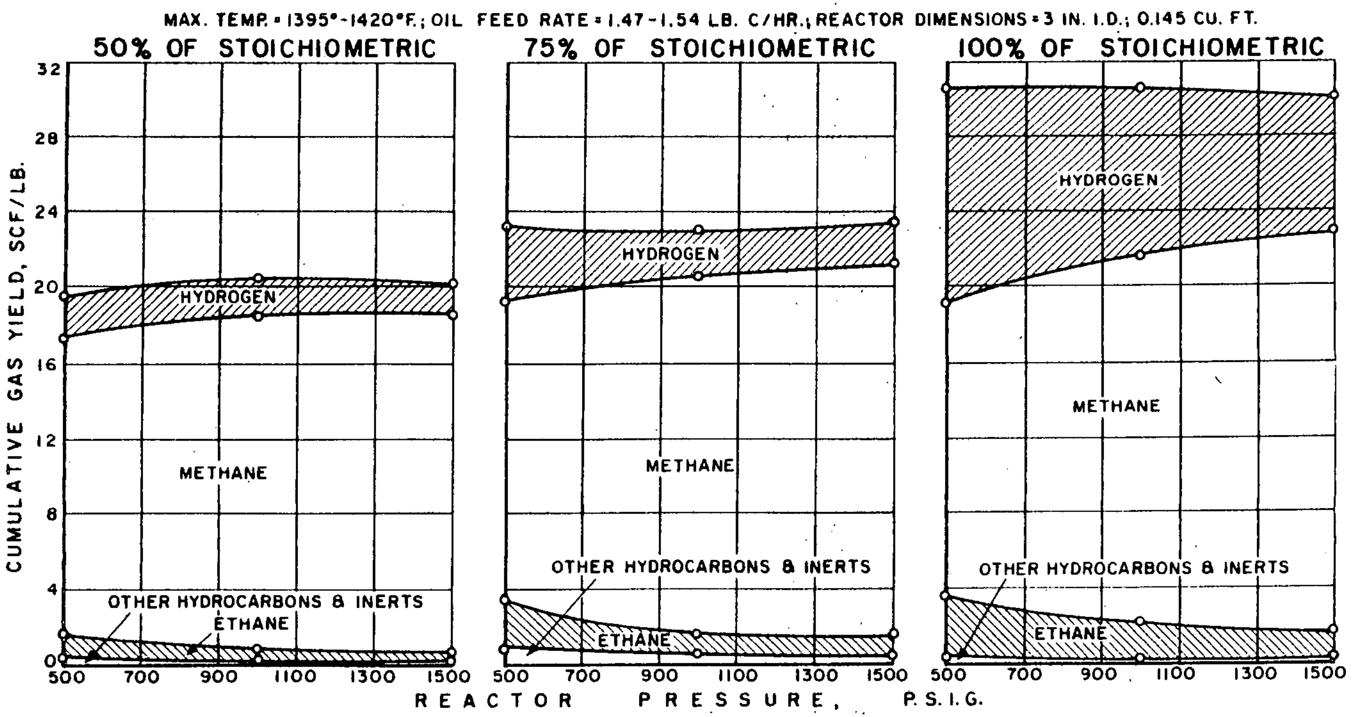

Figure 1.-EFFECTS OF HYDROGEN FEED RATIO AND PRESSURE ON GASEOUS PRODUCT YIELDS FROM DIESEL OIL

Table 4.-EFFECTS OF HYDROGEN FEED RATIO AND PRESSURE ON HYDROGASIFICATION OF DIESEL OIL

Max. Temp.: 1395°-1420°F. Oil Feed Rate: 1.47-1.54 lb. C/hr.
Reactor Dimensions: 3 in. Inside Diameter, 0.145 cu.ft.

Pressure, p.s.i.g.	500			1000			1500		
Hydrogen feed ratio, % of stoichiometric	50.0	75.0	100.1	51.6	73.2	100.4	49.7	73.7	99.9
Residence time, sec.	153	131	99.5	298	254	196	443	375	301
Product distribution, %									
Gas	72.3	86.7	90.4	76.2	86.5	90.8	76.6	88.5	93.2
Liquid	15.9	12.1	9.6	11.5	12.2	9.2	11.2	9.7	6.8
Carbon	11.8	1.2	nil	12.3	1.3	nil	12.2	1.8	nil
Product liquid properties									
0°-160°C. fraction									
Wt. % of total	45.6	54.9	62.4	52.8	54.2	75.4	49.1	58.5	82.4
Benzene content, mole %	81.8	83.2	89.8	84.2	83.1	92.4	85.6	84.2	94.8
160°C.-plus fraction									
Wt. % of total	53.1	44.4	36.6	46.1	45.1	23.4	49.9	40.4	16.5
C/H wt. ratio	16.19	15.05	14.49	16.16	16.10	14.98	16.01	16.11	14.87

Table 5.-EFFECTS OF REACTOR TEMPERATURE AND OIL FEED RATE ON HYDROGASIFICATION OF 0°-360°C. FRACTION OF PREHYDROGENATED TAPARITO CRUDE

Feed Ratio: 98.0-102.5% of stoichiometric. Pressure: 1500 p.s.i.g.
Reactor Dimensions: 2 in. Inside Diameter, 0.0644 cu.ft.

Feed rate, lb. C/hr.	1.33			0.67			0.34		
Residence time, sec.	150-180			290-350			620-750		
Maximum temperature, °F.	1100	1300	1400	1100	1300	1400	1100	1300	1400
Product distribution, %									
Gas	75.2	86.2	89.9	75.1	87.1	91.9	79.1	89.2	92.3
Liquid	24.8	13.8	10.1	24.9	12.9	8.1	20.9	10.8	7.7
Carbon	nil	nil	nil	nil	nil	nil	nil	nil	nil
Gaseous product yields, SCF/lb.									
H_2	21.8	14.3	9.7	20.9	14.3	9.1	17.3	10.6	6.2
CH_4	4.1	10.9	18.7	5.2	12.7	20.3	5.9	15.0	21.6
C_2H_6	2.7	5.1	1.8	3.3	4.5	1.1	3.7	3.3	0.5
C_3H_8	1.5	0.1	--	1.3	--	--	1.1	--	--
Other	0.7	0.2	0.3	0.4	0.1	0.2	0.2	0.1	0.2
Product liquid properties									
0°-160°C. fraction									
Wt. % of total	41.7	70.1	72.3	49.3	66.4	71.1	59.6	68.6	81.0
Benzene content, mole %	31.7	92.7	94.9	52.2	91.0	94.4	71.5	95.4	94.9
160°C.-plus fraction									
Wt. % of total	56.8	29.2	26.3	49.1	32.3	27.8	37.8	30.4	17.6
C/H wt. ratio	10.66	13.90	15.53	11.96	13.94	15.74	14.58	15.83	15.60

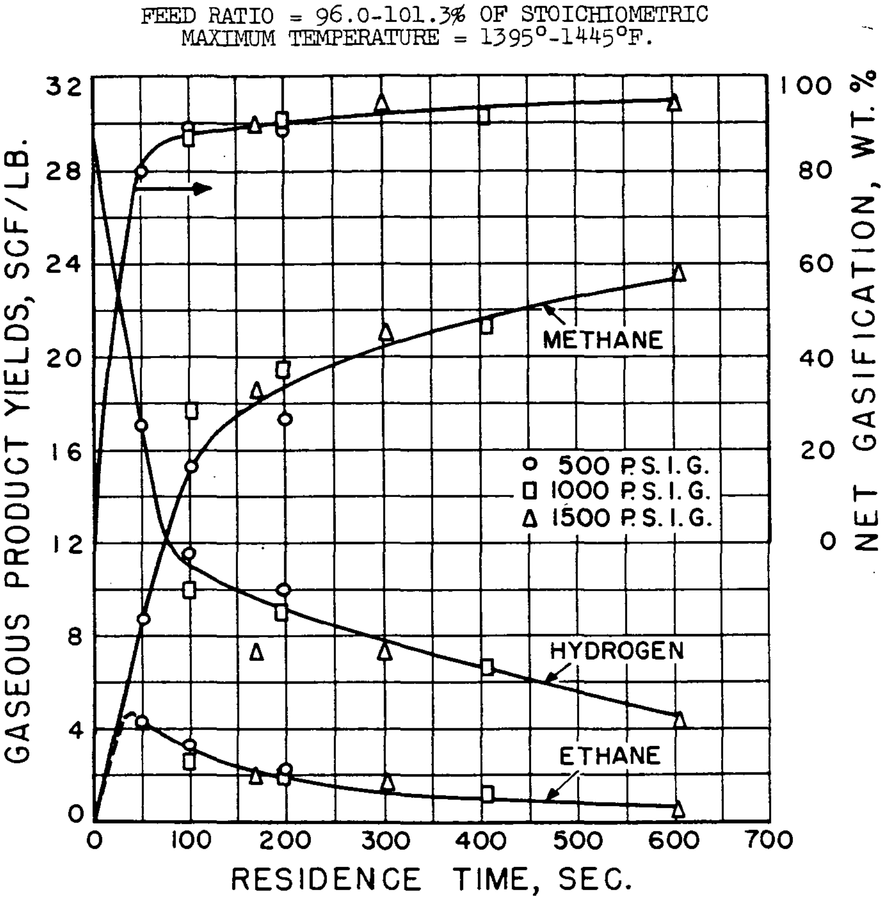

Figure 2.-EFFECTS OF RESIDENCE TIME ON GASEOUS PRODUCT YIELDS FROM DIESEL OIL

aromaticity of these liquid products. This was particularly evident in the highest feed rate run (shortest residence time) at 1100°F., where a substantial breakthrough of unreacted or partially converted feedstock was indicated by the low C/H weight ratio of the higher-boiling fraction of the liquid products, and the low benzene content of the lower-boiling fraction.

The gaseous product distributions in Table 5 clearly show the sequence of paraffin hydrogenolysis reactions leading to the formation of methane as the ultimate product. At 1100°F., ethane formation was still increasing toward its optimum value with increases in residence time, whereas at 1300° and 1400°F., ethane formation had passed its optimum. At 1100°F., propane formation had also passed its optimum within the range of residence times investigated. These trends are comparable with the results of previous batch reactor tests with low molecular weight paraffin hydrocarbons which indicated that, as temperature is increased, maxima in propane and ethane yields are obtained at approximately 1075° and 1200°F., respectively.[12]

INTEGRAL PROCESS CONCEPTS

Two hydrogen production schemes appear to be feasible for application in an integrated hydrogen production-prehydrogenation-hydrogasification process for conversion of crude and residual oils:

1) Catalytic steam reforming of a portion of the product gas, with reformer fuel requirements supplied by prehydrogenator recycle oil.
2) Partial oxidation (Texaco process[4]) of prehydrogenator recycle oil.

The flow diagrams of Figures 3 and 4, showing material requirements for all streams, are based on the production of 1 million SCF/hr. net pipeline gas from Taparito crude oil. A third integral process concept, not presented, would be autothermic catalytic reforming of product gas with steam and oxygen.

In Figure 3, the process gas feed supply for conventional catalytic steam reforming is provided by an increase in hydrogasification capacity of about 47% above that required for the net product gas yield. Fuel requirements for reforming are supplied with a portion of the prehydrogenator recycle oil.

When partial oxidation of prehydrogenator recycle oil is used for hydrogen production (Figure 4), somewhat less feed oil is required and byproduct aromatics production and prehydrogenation and hydrogasification duties are substantially reduced. Further, compression costs are considerably lower, since less make-up hydrogen and recycle hydrogen are used, and the pressure level of the hydrogen supply is higher (about 400 p.s.i.g. compared to about 100 p.s.i.g. for the reforming scheme). However, 276,000 SCF/hr. of oxygen must be supplied from an external source.

In the computations for Figures 3 and 4, actual data from Runs 80 and 89 (Tables 2 and 3) were employed for the prehydrogenation and hydrogasification steps. Published data for the Texaco partial oxidation step were used.[4] Practical operating feed ratios of 3 moles of steam per mole of carbon to the reforming and shift steps in Figure 3, and 2 moles of steam per mole of CO to the shift step in Figure 4, were employed.[5,10] For simplicity, complete conversion in the reforming and shift steps, and complete removal of CO_2 were assumed. Other assumptions made in these calculations are: saturated steam is available at 200 p.s.i.a. through waste heat recovery; fresh crude oil enters at 77°F.; reforming and preheat furnaces are 75% efficient.

Assuming costs of $2.50/barrel of feed crude oil and $6.00/ton of oxygen, and a crude aromatics byproduct credit of 10 cents/gallon, net

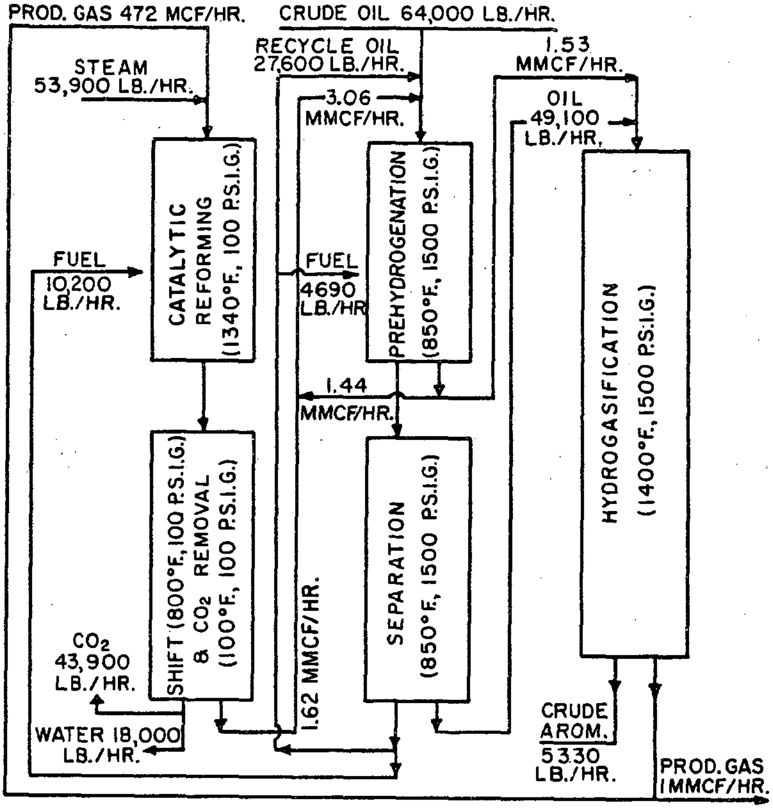
PROD. GAS 472 MCF/HR.
CRUDE OIL 64,000 LB./HR.
STEAM 53,900 LB./HR.
RECYCLE OIL 27,600 LB./HR.
3.06 MMCF/HR.
1.53 MMCF/HR.
OIL 49,100 LB./HR.
CATALYTIC REFORMING (1340°F., 100 P.S.I.G.)
PREHYDROGENATION (850°F., 1500 P.S.I.G.)
HYDROGASIFICATION (1400°F., 1500 P.S.I.G.)
FUEL 10,200 LB./HR.
FUEL 4690 LB./HR
1.44 MMCF/HR.
SHIFT (800°F., 100 P.S.I.G.) & CO₂ REMOVAL (100°F., 100 P.S.I.G.)
SEPARATION (850°F., 1500 P.S.I.G.)
1.62 MMCF/HR.
CO₂ 43,900 LB./HR.
WATER 18,000 LB./HR.
CRUDE AROM. 5330 LB./HR.
PROD. GAS 1 MMCF/HR.

MCF=10^3SCF, MMCF=10^6SCF

In, lb./hr.		Out, lb./hr.	
Oil	64,000	Product Gas	35,000
Steam	53,900	CO_2	43,900
	117,900	Crude Aromatics	5,330
		Oil for Ref. Fuel	10,200
		Oil for Prehydrog. Preheat	4,700
		Water	18,000
		Loss	770
			117,900

Figure 3.-HYDROGEN PRODUCTION BY CATALYTIC STEAM REFORMING OF PRODUCT GAS

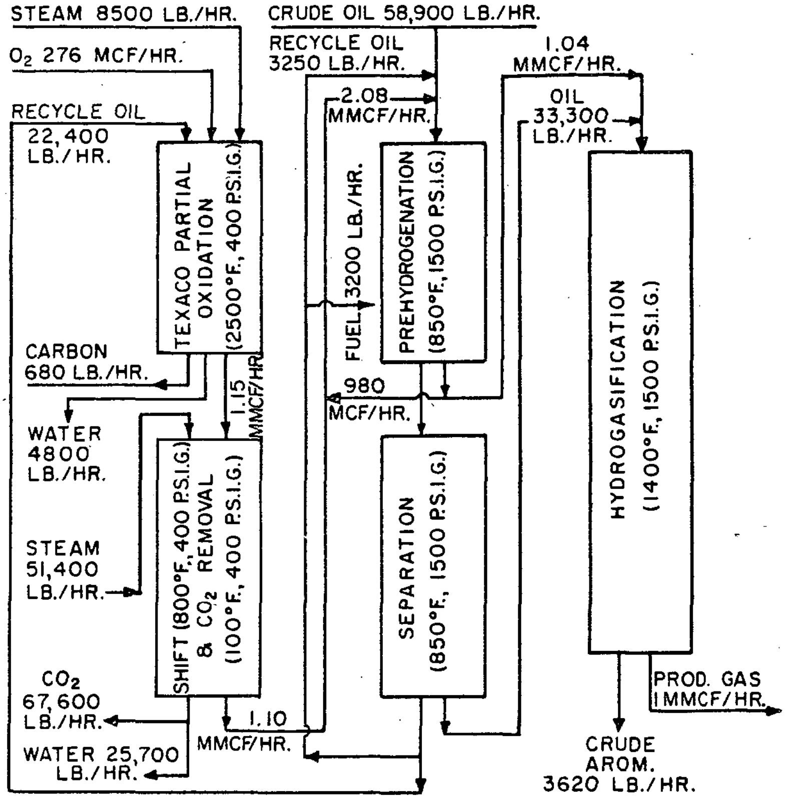
STEAM 8500 LB./HR.
CRUDE OIL 58,900 LB./HR.
O_2 276 MCF/HR.
RECYCLE OIL 3250 LB./HR.
1.04 MMCF/HR.
2.08 MMCF/HR.
OIL 33,300 LB./HR.
RECYCLE OIL 22,400 LB./HR.
TEXACO PARTIAL OXIDATION (2500°F., 400 P.S.I.G.)
FUEL 3200 LB./HR.
PREHYDROGENATION (850°F., 1500 P.S.I.G.)
HYDROGASIFICATION (1400°F., 1500 P.S.I.G.)
CARBON 680 LB./HR.
980 MCF/HR.
1.15 MMCF/HR.
WATER 4800 LB./HR.
SHIFT (800°F., 400 P.S.I.G.) & CO_2 REMOVAL (100°F., 400 P.S.I.G.)
SEPARATION (850°F., 1500 P.S.I.G.)
STEAM 51,400 LB./HR.
CO_2 67,600 LB./HR.
PROD. GAS 1 MMCF/HR.
1.10 MMCF/HR.
WATER 25,700 LB./HR.
CRUDE AROM. 3620 LB./HR.

MCF=10^3SCF, MMCF=10^6SCF

In, lb./hr.		Out, lb./hr.	
Oil	58,900	Product Gas	35,000
O_2	22,900	CO_2	67,600
Steam to Texaco	8,500	Crude Aromatics	3,620
Steam to Shift	51,400	Carbon from Texaco	680
	141,700	Water from Texaco	4,800
		Water from Shift	25,700
		Oil for Prehydrog. Preheat	3,200
		Loss	1,100
			141,700

Figure 4.-HYDROGEN PRODUCTION BY PARTIAL OXIDATION OF RECYCLE OIL

material costs of 55 and 60 cents/million B.t.u. net product gas were computed for the schemes of Figures 3 and 4, respectively. No estimate of other operating costs, or of investment costs, can be offered at this time.

ACKNOWLEDGMENT

This study was conducted under sponsorship of the Gas Operations Research Committee of the American Gas Association with the financial support of the Promotion-Advertising-Research Plan of the Association. The guidance and counsel of the Project Supervising Committee under the chairmanship of B. J. Clarke, and of T. L. Robey, N. K. Chaney and Wm. F. Morse, Jr., of the American Gas Association, are gratefully acknowledged. H. L. Feldkirchner, A. E. Richter and R. F. Johnson assisted in the collection of operating data. Analytical work was supervised by D. M. Mason and J. E. Neuzil.

LITERATURE CITED

(1) Chem. Eng. 65, 64, 66, 68 (August 25, 1958).

(2) Cottingham, P. L., White, E. R., Frost, C. M., Ind. Eng. Chem. 49, 679-84 (1957).

(3) Dent, F. J., Edge, R. F., Hebden, D., Wood, F. C., Yarwood, T. A., Gas Council (London) Research Commun. GC 37 (November 1956).

(4) Eastman, DuB., Ind. Eng. Chem. 48, 1118-22 (1956).

(5) Eickmeyer, A. G., Marshall, W. H., Jr., Chem. Eng. Progr. 51, 418-21 (1955).

(6) Gas J. 293, 484 (1958).

(7) Grace, R. J., Gauger, A. W., Ind. Eng. Chem., Anal. Ed. 18, 563-5 (1946).

(8) Gwin, G. T., Heinrich, R. L., Hoffmann, E. J., Manne, R. S., Meyer, H. W. H., Miller, J. R., Thorpe, C. L., Ind. Eng. Chem. 49, 668-72 (1957).

(9) Linden, H. R., in Kirk, R. E., Othmer, D. F., "Encyclopedia of Chemical Technology," vol. 6, pp. 913-35, Interscience Encyclopedia, New York, 1951.

(10) Linden, H. R., Reid, J. M., Petrol. Refiner 35, 189-95 (June 1956).

(11) Shultz, E. B., Jr., Channabasappa, K. C., Linden, H. R., Ind. Eng. Chem. 48, 894-905 (1956).

(12) Shultz, E. B., Jr., Linden, H. R., Ind. Eng. Chem. 49, 2011-6 (1957).

(13) Shultz, E. B., Jr., Linden, H. R., Petrol. Refiner 36, 205-10 (September 1957).

(14) Smith, P. E., master of gas technology thesis, Illinois Institute of Technology, June 1952.

(15) Stevenson, D. H., Heinemann, H., Ind. Eng. Chem. 49, 664-7 (1957).